TECHNICAL BULLETIN

HORIZONTAL CENTRIFUGAL FIBERGLASS PUMP SERIES GRP

GENERAL INFORMATION

The GRP Pump is constructed of a glass reinforced polymer fiberglass composite material which is inert to the majority of corrosive chemical solutions.

The GRP is a single stage, end suction, centerline discharge pump designed to ANSI B 73.1 Standards for Chemical Process pumps. The ANSI specification covers three (3) basic frame sizes, or more precisely, groups of pumps having the same overall flange to coupling dimension. Those are: 17½" for Group I, 23½" for Group II and 33⅞" for Group III. There are two GRP sizes in Group I, five in Group II, and one in Group III. Each group of GRP's is designed with back pullout construction and maximum interchangeability. All sizes of the GRP are standard with open impellers driven by a polygon shaped shaft. The impellers are statically balanced and externally adjustable. The stuffing box is designed for 5 rings of packing and lantern ring, or balanced or unbalanced mechanical seals. Shaft sleeves are replaceable hook type sealed to prevent leakage to the shaft. Sleeveless shafts are available as options. Bearings are oil lubricated with a minimum B-10 life of 3 years. The coupling end bearing is double row to carry the thrust loads. The complete GRP line is cradle mounted, utilizing standard shaft, foot mounted motor, as well as a variety of other drivers.

All sizes conform to ANSI dimensional standards.

STANDARD CURVES 3600 RPM 60 HERTZ

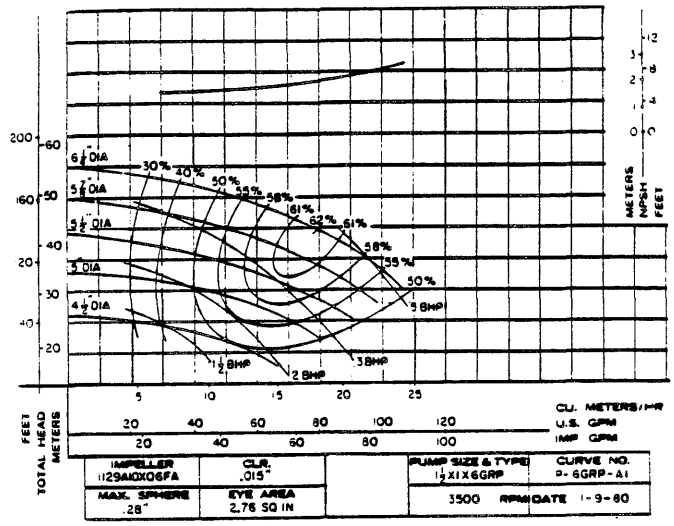

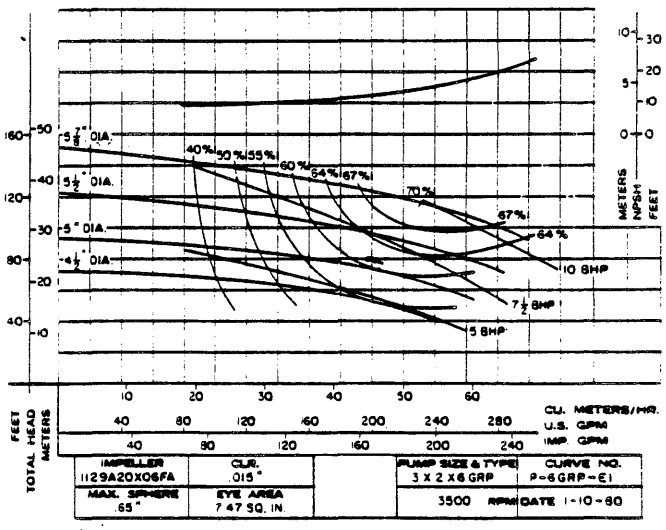

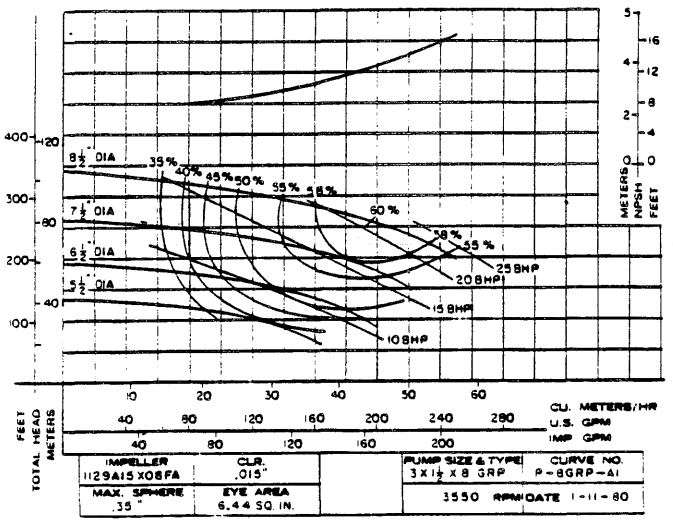

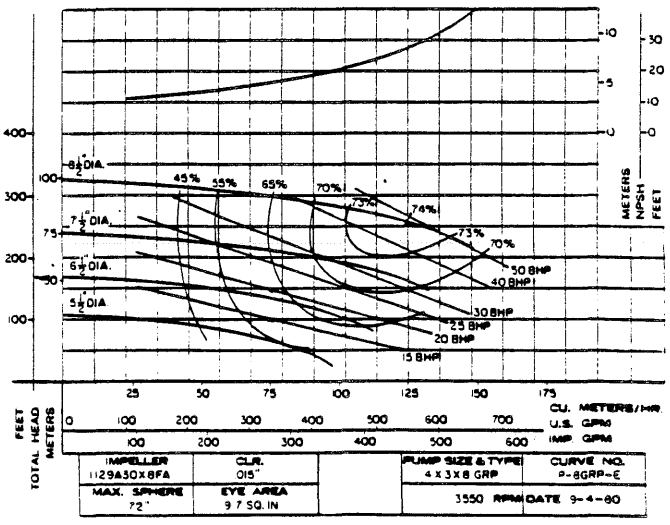

Dom. & Exp. on 9D. Dist. on 10C.

STANDARD CURVES 1800 RPM 60 HERTZ

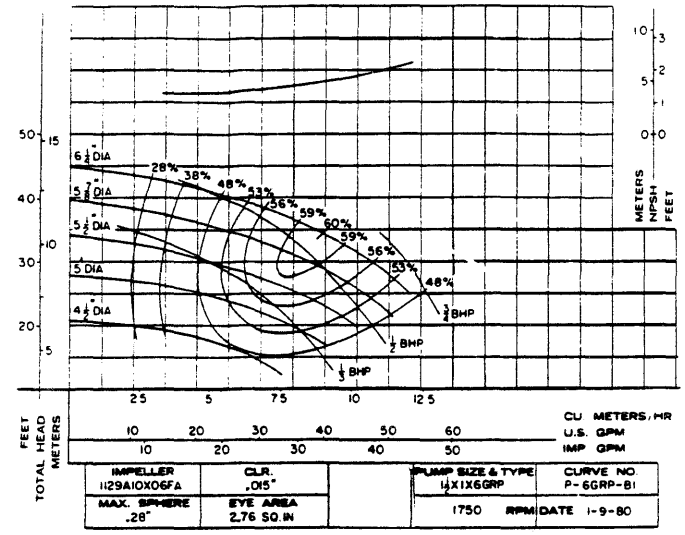

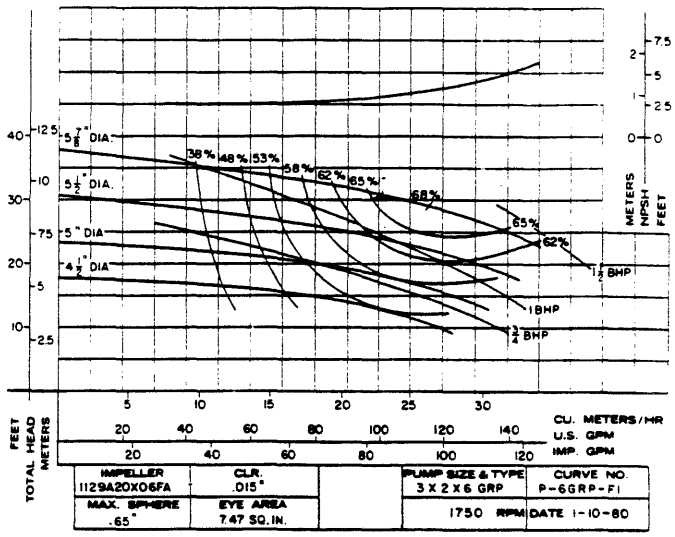

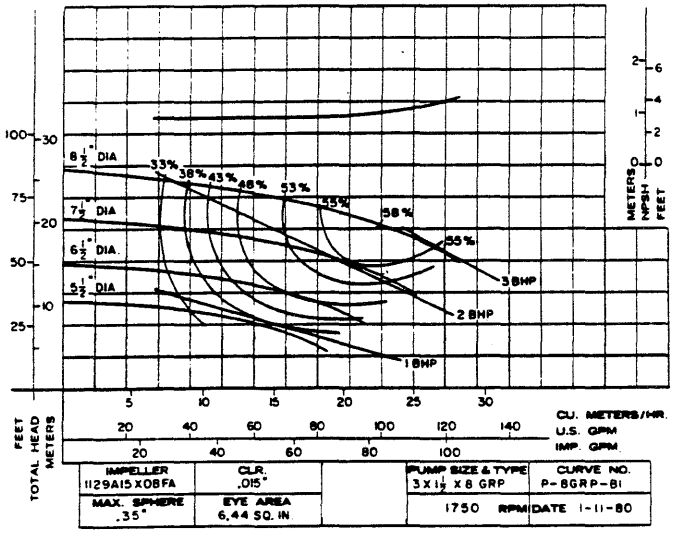

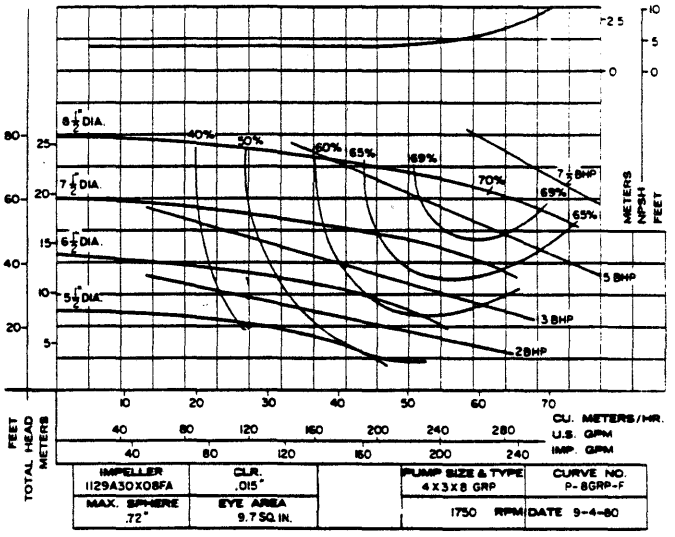

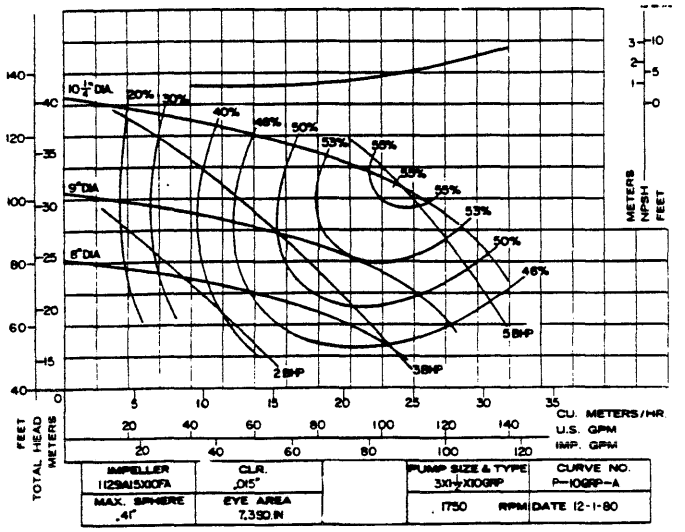

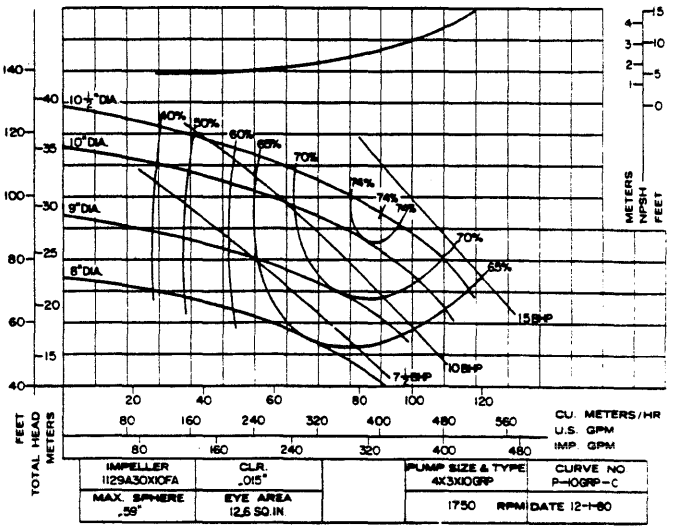

Continued on next page . . .

STANDARD CURVES 1800 RPM/1200 RPM 60 HERTZ

Dom. & Exp. on 9D. Dist. on 10C.

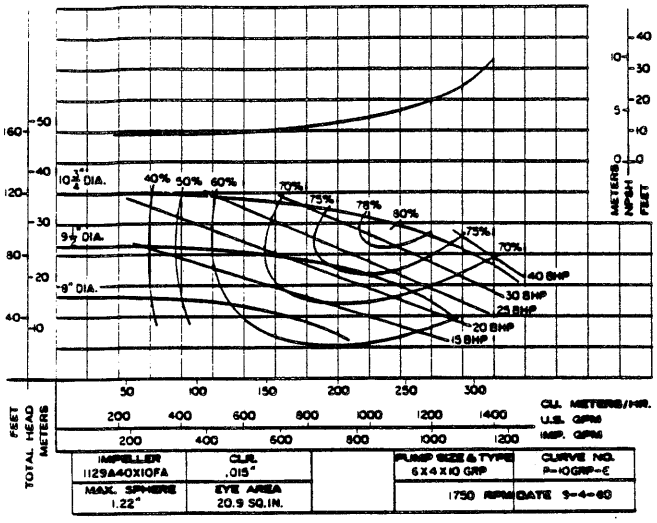

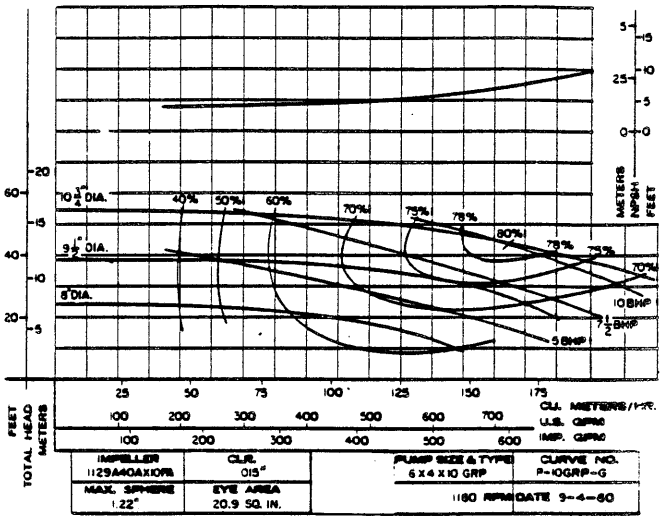

GRP CHEMICAL PUMPS
PRESSURE AND TEMPERATURE RATINGS

Group	Type	ANSI Designation	Design Pressure[1]	Maximum Suction Pressure	Hydro Test Pressure	Stuffing Box Pressure[2]	Max. Operating Temperature[1]
I	1½x1x6	AA	100	↑	150	↑	↑
	3x2x6		100		150		
II	3x1½x8	A50	175	25 PSIG	250	SEE NOTE 2	200° F
	4x3x8	A70	175		250		
	3x1½x10	A50	100		150		
	4x3x10	A70	100		150		
	6x4x10	A75	100		150		
III	8x6x13	A90	100	↓	150	↓	↓

1 Refer to corrosion-resistance guide for temperature limits of specific chemicals, and chart below.
2. Refer to Stuffing Box Pressure chart sheet 302 Back.
3. All flanges 150 lb. Flat Face Dimensions.

(over)

GRP PRESSURE-TEMPERATURE RATINGS

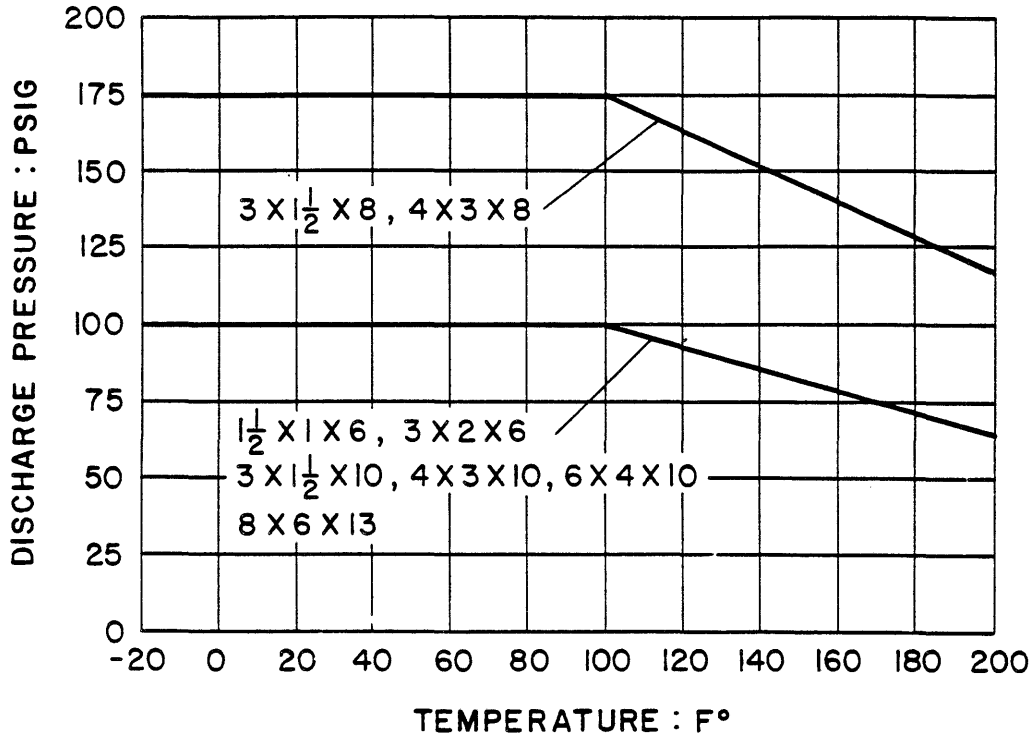

STUFFING BOX PRESSURE VS. GENERATED PRESSURE

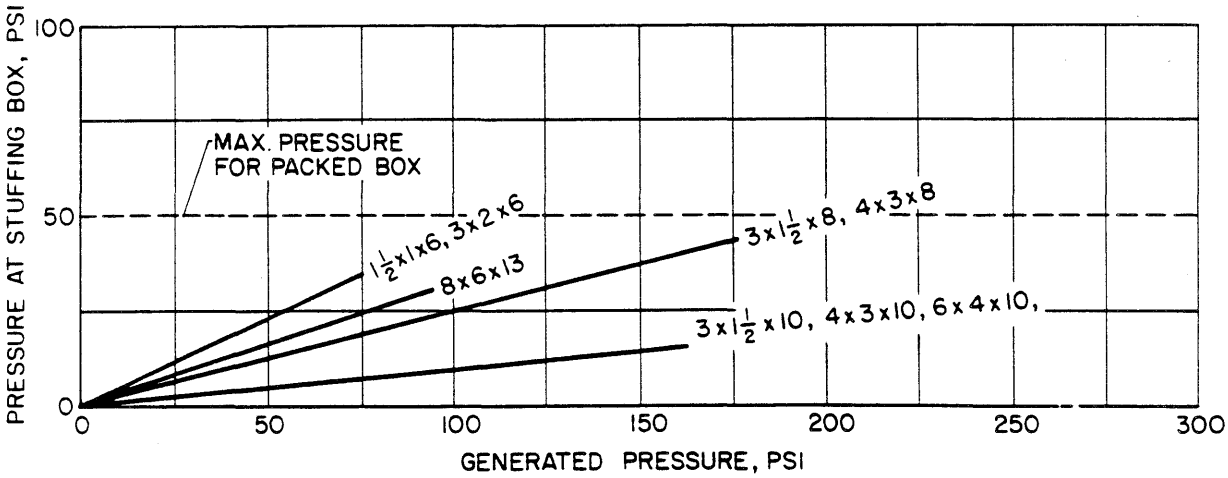

- Stuffing box pressure in excess of 50 PSIG will require a mechanical seal.
- Suction pressure is to be added to pressure at stuffing box to obtain total stuffing box pressure.

Continued on next page . . .

Dom. & Exp. on 9D. Dist. on 10C.

GRP MATERIALS SELECTION GUIDE

The GRP material is a proprietary Ingersoll Rand glass reinforced vinyl ester material. The "single material concept" represents extensive development to achieve the strength and chemical resistance over the broad range of chemicals shown below.

The data is based on representative chemical resistance testing performed at I.R. Research and information from our raw material supplier. The data must be considered a guide for our best recommendation, but cannot be considered a guarantee.

Key to data

Typical concentrations are given for the chemicals shown. "All" represents any soluble concentration.

The temperature shown is the maximum allowable temperature for the listed concentration of each chemical.

N/R in the temperature column indicates that the GRP is not suitable for the application.

The shaft/sleeve material column indicates recommended materials for vertical GRP shafting or horizontal GRP optional metal shaft sleeve.

The wet end 'O'-Ring material is available as Viton A or Teflon. Viton A is standard; Teflon is optional at extra cost.

Note: The GRP material is not FDA approved.

GRP CORROSIVE RESISTANCE

Chemical Environment	% Concentration	Max. Temp-°F	Materials: Shaft/ Sleeve	Materials: O-Ring
Acetic Acid	10	180	316 SS	Teflon
Acetic Acid	15	180	316 SS	Teflon
Acetic Acid	25	180	316 SS	Teflon
Acetic Acid	50	150	316 SS	Teflon
Acetic Acid	75	120	316 SS	Teflon
Acetic Acid, Glacial	100	N/R	—	—
Acetic Anhydride	100	N/R	—	—
Acetone	10	N/R	—	—
Acid Cleaner - 31% hydrochloric		150	Hast. B	Viton
Acrylic Acid	25		316 SS	Viton
Adipic Acid	23	150	316 SS	Viton
Alkyl Benzene Sulfonic Acid	92	100	316 SS	Viton
Alpha Methyl Styrene		120	316 SS	Viton
Alum	All	200	Alloy 20	Viton
Aluminum Chloride	All	200	Hast. C	Viton
Aluminum Nitrate	All	180	316 SS	Viton
Aluminum Potassium Sulfate	All	200	Alloy 20	Viton
Aluminum Sulfate	All	200	Alloy 20	Viton
Ammonia (Anhydrous)		N/R	—	—
Ammonium Bicarbonate	50	150	316 SS	Viton
Ammonium Bisulfate Cooking Liquor		150	316 SS	Viton
Ammonium Bisulfate Black Liquor		180	316 SS	Viton
Ammonium Carbonate	All	150	316 SS	Viton
Ammonium Chloride	All	200	316 SS	Viton
Ammonium Hydroxide	5	120	316 SS	Viton
Ammonium Hydroxide	10	120	316 SS	Viton
Ammonium Hydroxide	20	120	316 SS	Viton
Ammonium Hydroxide	29	100	316 SS	Viton
Ammonium Nitrate	All	200	316 SS	Viton
Ammonium Phospate Dibasic	65	150	316 SS	Viton
Ammonium Phospate Monobasic	65	150	316 SS	Viton
Ammonium Sulfate	All	200	Alloy 20	Viton
Amyl Acetate	All	100	316 SS	Teflon
Amyl Alcohol	All	120	316 SS	Viton
Barium Acetate	All	120	316 SS	Viton
Barium Carbonate	All	150	316 SS	Viton
Barium Chloride	All	200	316 SS	Viton
Barium Hydroxide	10	120	316 SS	Viton
Barium Sulfate	All	200	316 SS	Viton
Barium Sulfide	All	150	316 SS	Viton
Benzene	100	120	316 SS	Viton
Black Liquor	All	150	316 SS	Viton
Black Liquor (Pulp Mill)	Thick	180	316 SS	Viton
Black Liquor Kraft	Thin	150	316 SS	Viton
Black Liquor Kraft	Thick	180	316 SS	Viton
Bleach Liquor (Pulp Mill)	All	150	316 SS	Viton
Borax	100	200	316 SS	Viton
Boric Acid	All	200	316 SS	Viton
Brine	All	200	Alloy 20	Viton
Bromine Liquid	100	N/R	—	—
Butyl Acetate	100	N/R	—	—
Butyl Alcohol	All	100	316 SS	Viton
Butyl Benzyl Phthalate	100	120	316 SS	Viton
Butylene Glycol	100	150	316 SS	Viton
Butylene Oxide	100	N/R	—	—
Butyric Acid	25	180	Hast. C	Viton
Butyric Acid	50	180	Hast. C	Viton
Butyric Acid	100	100	Hast. C	Viton
Cadmium Chloride	All	180	316 SS	Viton
Calcium Bisulfite	All	150	316 SS	Viton
Calcium Carbonate	All	150	316 SS	Viton
Calcium Chloride	All	200	316 SS	Viton
Calcium Hydroxide	All	150	316 SS	Viton
Calcium Hypochlorite	All	120	Alloy 20	Viton
Calcium Nitrate	All	200	316 SS	Viton

RATINGS, MATERIALS and STD. CONST.

(over)

GRP CORROSIVE RESISTANCE

Chemical Environment	% Concentration	Max. Temp-°F	Materials Shaft/ Sleeve	Materials O-Ring
Calcium Sulfate	All	200	316 SS	Viton
Calcium Sulfite		150	316 SS	Viton
Caprylic Acid (See Octanoic Acid)	All	150	316 SS	Viton
Carbon Disulfide	100	N/R	—	—
Carbon Tetrachloride	100	180	316 SS	Viton
Carbowax Polyethylene Glycol	100	180	316 SS	Viton
Castor Oil	100	150	316 SS	Viton
Chlorinated Wax	All	150	316 SS	Viton
Chlorine Dioxide	15	150	Hast. C	Viton
Chlorine Dioxide	All	130	Hast. C	Viton
Chlorine Dioxide Generator Effluent, R-2 System	All	150	Hast. C	Viton
Chlorine Water	Sat'd	180	Hast. C	Viton
Chloroacetic Acid	25	100	Hast. C	Teflon
Chloroacetic Acid	50	80	Hast. C	Teflon
Chloroacetic Acid	Conc.	N/R	—	—
Chlorobenzene	100	110	316 SS	Viton
Chloroform	100	N/R	—	—
N-Chloro O-Tolyl (Insecticide Emulsion)	10	100	316 SS	Viton
Chromic Acid	5	150	316 SS	Viton
Chromic Acid	10	150	316 SS	Viton
Chromic Acid	20	120	316 SS	Viton
Chromic Acid	30	N/R	—	—
Chromium Plate		100	Alloy 20	Viton
Chromium Sulfate	All	150	Alloy 20	Viton
Citric Acid	All	180	316 SS	Viton
Copper Chloride	All	200	316 SS	Viton
Copper Nitrate	All	180	316 SS	Viton
Copper Sulfate	All	200	316 SS	Viton
Corn Oil		180	316 SS	Viton
Cottonseed Oil		180	316 SS	Viton
Crude Oil, Sour	100	200	316 SS	Viton
Crude Oil, Sweet	100	200	316 SS	Viton
Cyclohexane	100	120	316 SS	Viton
Deionized Water	100	180	316 SS	Viton
Demineralized Water	100	180	316 SS	Viton
Diallyphthalate	All	150	316 SS	Viton
Di-Ammonium Phosphate	65	150	316 SS	Viton
Dibutyl Sebacate	All	120	316 SS	Viton
Dibutyl Ether	100	150	316 SS	Viton
Dichlorobenzene	100	120	316 SS	Viton
Dichloroethane	100	N/R	—	—
Dichloroethylene	100	N/R	—	—
Dichloromethane	100	N/R	—	—
Diesel Fuel	100	200	316 SS	Viton
Diethanol Amine (DEA)	100	100	316 SS	Teflon
Diethyl Benzene	100	120	316 SS	Viton
Diethylene Glycol	100	180	316 SS	Viton
Diethylhexyl Phosphoric Acid (In Kerosene)	20	120	316 SS	Viton
Diisobutyl Phthalate	100	120	316 SS	Viton
Diisopropanol Amine	100	120	316 SS	Viton
Dimethyl Formamide	100	N/R	—	—
Dimethyl Phthalate	100	150	316 SS	Viton
Dioctyl Phthalate	100	150	316 SS	Viton
DMA 4 Weed Killer 2,4-D (Dimethylamine)		150	316 SS	Viton
DMA 6 Weed Killer		100	316 SS	Viton

Chemical Environment	% Concentration	Max. Temp-°F	Materials Shaft/ Sleeve	Materials O-Ring
Dipropylene Glycol	100	150	316 SS	Viton
Distilled Water	100	150	316 SS	Viton
Divinyl Benzene	100	120	316 SS	Viton
Dodecyl Alcohol (Lauryl)	100	150	316 SS	Viton
Dowanol EB Glycol Ether	100	100	316 SS	Viton
Dowfax ZA1 Surfactant	45% Sol'n	100	316 SS	Viton
Dowfax ZA0 Surfactant	40% Sol'n	100	316 SS	Viton
Dowicide B Antimicrobial		100	316 SS	Viton
Dowtherm A Heat Transfer Agent	100	120	316 SS	Viton
ECR-34	100	100	316 SS	Viton
Electrosol Anti-Static Agent	5	120	316 SS	Viton
Ethanol	95	80	316 SS	Viton
Ethyl Alcohol	All	100	316 SS	Viton
Ethyl Benzene		120	316 SS	Viton
Ethyl Bromide		N/R	—	—
Ethyl Chloride	100	N/R	—	—
Ethyl Ether	100	N/R	—	—
Ethyl Sulfate	100	100	316 SS	Teflon
Ethylene Chlorohydrin	100	100	316 SS	Teflon
Ethylene Glycol	All	180	316 SS	Viton
Fatty Acids	All	200	316 SS	Viton
Ferric Chloride	All	200	Hast. C	Viton
Ferric Nitrate	All	180	316 SS	Viton
Ferric Sulfate	All	200	316 SS	Viton
Ferrous Chloride	All	200	Hast. B	Viton
Ferrous Nitrate	All	180	316 SS	Viton
Ferrous Sulfate	All	200	316 SS	Viton
8-8-8 Fertilizer Composition (Parts by wt. - 30 phosphoric acid, 29 ammonia, 104.3 water, 10.4 uran, 26.0 potash, 3.0 borax, pH 8.2)		120	316 SS	Viton
Fertilizer, Uran (urea-ammonium nitrate composition 43.3% ammonium nitrate, 35.4% urea, 20.3% water)		120	316 SS	Viton
Formaldehyde	All	120	316 SS	Viton
Formic Acid	10	150	316 SS	Teflon
Fuel Oil	100	200	316 SS	Viton
Furfural	100	N/R	—	—
Galecron 4EC Insecticide		100	316 SS	Viton
Gasoline	100	150	316 SS	Viton
Gasoline, Aviation	100	150	316 SS	Viton
Gasoline, Ethyl	100	150	316 SS	Viton
Gluconic Acid	50	150	316 SS	Viton
Glucose	100	200	316 SS	Viton
Gluteraldehyde	50	100	316 SS	Viton
Gluteric Acid	50	100	316 SS	Viton
Glycerine	100	200	316 SS	Viton
Glycol	All	200	316 SS	Viton
Glycolic Acid (Hydroxy Acetic)	70	100	316 SS	Viton
Heptane	100	180	316 SS	Viton

Continued on nest page . . .

Dom. & Exp. on 9D. Dist. on 10C.

GRP CORROSIVE RESISTANCE

Chemical Environment	% Concentration	Max. Temp-°F	Materials: Shaft/ Sleeve	Materials: O-Ring
n-Heptane	100	180	316 SS	Viton
Hexane	100	150	316 SS	Viton
Hydraulic Fluid	100	150	316 SS	Viton
Hydrazine	100	N/R	—	—
Hydrobromic Acid	18	150	Hast. C	Viton
Hydrobromic Acid	25	150	Hast. C	Viton
Hydrobromic Acid	48	120	Hast. C	Viton
Hydrobromic Acid	62	80	Hast. C	Viton
Hydrochloric Acid	10	180	Hast. B	Viton
Hydrochloric Acid	15	180	Hast. B	Viton
Hydrochloric Acid	20	160	Hast. B	Viton
Hydrochloric Acid	37	140	Hast. B	Viton
Hydrochloric Acid + Free Cl_2	All	150	Hast. C	Viton
Hydrofluoric Acid	Traces (<1%)	150	Alloy 20	Viton
Hydrofluoric Acid	All	N/R	—	—
Hydrogen Peroxide	30	150	316 SS	Viton
Hydrogen Sulfide	All	180	316 SS	Viton
Hydrosulfite Bleach (Aqueous sol'n, 5% zinc hydrosulfite 2.5% tripoly-phosphate)		150	316 SS	Viton
Hypochlorous Acid	10	150	Hast. C	Viton
Hypochlorous Acid	20	120	Hast. C	Viton
Hypophosphorous Acid	50	100	316 SS	Viton
Iron & Steel Cleaning Bath 9% Hydro-chloric 23% sulfuric		180	Hast. B	Viton
Isopropyl Alcohol	All	100	316 SS	Viton
Isopropyl Amine	100	100	316 SS	Viton
Isopropyl Myristate		180	316 SS	Viton
Isopropyl Palmitate	100	150	316 SS	Viton
Jet Fuel (JP-4)	100	150	316 SS	Viton
Kerosene	100	150	316 SS	Viton
Lactic Acid	All	150	316 SS	Viton
Lauryl Alcohol	100	120	316 SS	Viton
Lauroyl Chloride		100	316 SS	Viton
Lead Acetate	All	180	316 SS	Viton
Levulinic Acid	All	180	316 SS	Viton
Linseed Oil	100	200	316 SS	Viton
Lithium Bromide	Sat'd	180	316 SS	Viton
Lithium Carbonate	Sat'd	150	316 SS	Viton
Lithium Chloride	Sat'd	180	Alloy 20	Viton
Lithium Hypochlorite	All	120	Hast. C.	Viton
Lithium Hydroxide	Sat'd	150	316 SS	Viton
Magnesium Bisulfite	All	150	316 SS	Viton
Magnesium Carbonate	All	150	316 SS	Viton
Magnesium Chloride	All	200	316 SS	Viton
Magnesium Hydroxide	All	140	316 SS	Viton
Magnesium Sulfate	All	200	316 SS	Viton
Magnifloc 837A	All	150	316 SS	Viton
Maleic Acid	100	200	Alloy 20	Viton
Mercuric Chloride	All	180	Hast. B	Viton
Mercurous Chloride	All	180	Hast. B	Viton
Methanol	100	N/R	—	—
Methyl Alcohol	100	N/R	—	—

Chemical Environment	% Concentration	Max. Temp-°F	Materials: Shaft/ Sleeve	Materials: O-Ring
Methyl Ethyl Ketone	100	N/R	—	—
Methyl Styrene (Alpha)	100	100	316 SS	Viton
Methylene Chloride	100	N/R	—	—
Mineral Oils	100	200	316 SS	Viton
Monochlorobenzene	100	120	316 SS	Viton
Monoethanolamine (MEA)	100	N/R	—	—
Motor Oil		200	316 SS	Viton
Muriatic Acid (See Hydrochloric Acid)				
Myristic Acid	100	200	316 SS	Viton
Naphtha	100	180	316 SS	Viton
Naptha, Heavy Aromatic		120	316 SS	Viton
Nickel Chloride	All	200	Hast. B	Viton
Nickel Nitrate	All	200	316 SS	Viton
Nickel Sulfate	All	200	316 SS	Viton
Nitric Acid	5	180	316 SS	Viton
Nitric Acid	20	150	316 SS	Viton
Nitric Acid	40	N/R	—	—
Nitrobenzene	100	N/R	—	—
Oakite Rust Stripper	All	160	316 SS	Viton
Octanoic Acid	100	180	316 SS	Viton
Oil, Sour Crude	100	200	316 SS	Viton
Oil, Sweet Crude	100	200	316 SS	Viton
Oleic Acid	All	180	316 SS	Viton
Olive Oils	100	200	316 SS	Viton
Oxalic Acid	All	180	316 SS	Viton
Palmitic Acid	100	200	316 SS	Viton
Pentanedioic Acid (See Gluteric Acid)	50	100	316 SS	Viton
Perchlorethylene	100	100	316 SS	Viton
Perchloric Acid	10	120	Hast. C	Viton
Perchloric Acid	30	100	Hast. C	Viton
Peroxide Bleach (Aqueous sol'n 2% sodium peroxide 96%, 0.025% epsom salts, 5.0% sodium silicate, 42°Be, 1.4% sulfuric acid 66°Be)		150	Alloy 20	Viton
Phenol (See traces under water)	88	N/R	—	—
Phosphoric Acid	All	180	316 SS	Viton
Phosphoric Acid (super-phosphoric acid, 76% P_2O_5)	105	180	316 SS	Viton
Phosphoric Acid (polyphosphoric acid, 115% H_3PO_4)	115	180	316 SS	Viton
Phosphorous Acid	70	100	316 SS	Viton
Phosphorous Trichloride	All	N/R	—	—
Phthalic Acid	All	180	Alloy 20	Teflon
Plating Solutions: See End of List				
Potassium Aluminum Sulfate	All	200	Alloy 20	Viton

GRP CORROSIVE RESISTANCE

Chemical Environment	% Concentration	Max. Temp-°F	Materials Shaft/ Sleeve	Materials O-Ring
Potassium Bicarbonate	10	120	316 SS	Viton
Potassium Bicarbonate	50	150	316 SS	Viton
Potassium Carbonate	10	120	316 SS	Viton
Potassium Carbonate	25	120	316 SS	Viton
Potassium Carbonate	50	150	316 SS	Viton
Potassium Chloride	All	200	316 SS	Viton
Potassium Dichromate	All	180	316 SS	Viton
Potassium Ferricyanide	All	180	316 SS	Viton
Potassium Ferrocyanide	All	180	316 SS	Viton
Potassium Hydroxide	10	120	316 SS	Viton
Potassium Hydroxide	25	120	316 SS	Viton
Potassium Hydroxide	45	150	316 SS	Viton
Potassium Nitrate	All	200	316 SS	Viton
Potassium Permanganate	All	180	316 SS	Viton
Potassium Persulfate	All	180	316 SS	Viton
Potassium Sulfate	All	200	316 SS	Viton
Propionic Acid	50	150	316 SS	Viton
Propionic Acid	100	80	316 SS	Viton
Propylene Chlorohydrin	All	100	Hast. C	Teflon
Propylene Glycol	All	180	316 SS	Viton
Pulp Paper Mill Effluent		150	316 SS	Viton
Selenious Acid	All	180	316 SS	Viton
Silver Nitrate	All	200	316 SS	Viton
Sodium Acetate	All	150	316 SS	Viton
Sodium Aluminate	All	100	316 SS	
Sodium Benzoate	100	150	316 SS	Viton
Sodium Bicarbonate	10	140	316 SS	Viton
Sodium Bicarbonate	Sat'd	140	316 SS	Viton
Sodium Bisulfate	All	180	316 SS	Viton
Sodium Bisulfite	Sat'd	180	316 SS	Viton
Sodium Borate	Sat'd	180	316 SS	Viton
Sodium Bromate	5	120	316 SS	Viton
Sodium Bromide	All	200	Hast. C	Viton
Sodium Carbonate	10	120	316 SS	Viton
Sodium Carbonate	25	140	316 SS	Viton
Sodium Carbonate	32	140	316 SS	Viton
Sodium Carbonate	35	140	316 SS	Viton
Sodium Chlorate	50	180	Hast. C	Viton
Sodium Chloride, pH 11, some Cl_2	Sat'd	120	Hast. C	Viton
Sodium Chloride, pH 10.5, Sat'd Cl_2	Sat'd	120	Hast. C	Viton
Sodium Chloride, pH 3.5	Sat'd	180	Alloy 20	Viton
Sodium Chlorite	10	120	Alloy 20	Viton
Sodium Chlorite	50	80	Alloy 20	Viton
Sodium Chromate	50	180	316 SS	Viton
Sodium Cyanide	All	180	316 SS	Viton
Sodium Dichromate	100	180	316 SS	Viton
Sodium Diphosphate				
Sodium Dodecyl-Benzene-Sulfonate	100	180	316 SS	Viton
Sodium Ferricyanide	All	180	316 SS	Viton
Sodium Ferrocyanide	All	180	316 SS	Viton
Sodium Hydroxide	5	120	316 SS	Viton
Sodium Hydroxide	10	140	316 SS	Viton
Sodium Hydroxide	25	140	316 SS	Teflon
Sodium Hydroxide	50	160	316 SS	Teflon
Sodium Hypochlorite	5¼	120	Hast. C	Viton
Sodium Hypochlorite	10	120	Hast. C	Viton
Sodium Hypochlorite	18	140	Hast. C	Viton
Sodium Lauryl Sulfate	All	150	316 SS	Viton
Sodium Mono-Phosphate	All	180	316 SS	Viton
Sodium Nitrate	All	200	316 SS	Viton
Sodium Nitrite	All	200	316 SS	Viton
Sodium Persulfate	20	100	316 SS	Viton
Sodium Polyacrylate pH 9–10.5	25	120	316 SS	Viton
Sodium Sulfate	All	200	316 SS	Viton
Sodium Sulfide	All	200	316 SS	Viton
Sodium Sulfite	All	200	316 SS	Viton
Sodium Tetraborate	Sat'd	120	316 SS	Viton
Sodium Thiocyanate	57	150	316 SS	Viton
Sodium Thiosulfate	All	150	316 SS	Viton
Sodium Tripolyphosphate	Sat'd	180	316 SS	Viton
Sodium Xylene Sulfonate	All	120	316 SS	Viton
Solvent Composite— 35% Xylene, 35% Kerosene, 30% di-2 ethyl hexyl phosphoric acid		120	316 SS	Viton
Sorbitol Solutions	All	150	316 SS	Viton
Soya Oil	100	180	316 SS	Viton
Stannic Chloride	All	200	Hast. B	Viton
Stannous Chloride	All	200	Hast. B	Viton
Styrene	100	120	316 SS	Viton
Sugar, Beet, Liquor		150	316 SS	Viton
Sugar, Cane, Liquor & Sweetwater	All	150	316 SS	Viton
Sugar/Sucrose	All	180	316 SS	Viton
Sulfamic Acid	10	180	Alloy 20	Viton
Sulfanilic Acid	All	180	Alloy 20	Viton
Sulfated Detergents	50	180	Alloy 20	Viton
Sulfated Detergents	100	180	Alloy 20	Viton
Sulfite/Sulfate Liquors (Pulp Mill)		150	Alloy 20	Viton
Sulfonated Detergents	100	180	Alloy 20	Viton
Sulfuric Acid	25	180	Alloy 20	Viton
Sulfuric Acid	70	150	Alloy 20	Viton
Sulfuric Acid	75	80	Alloy 20	Viton
Sulfuric Acid	80–100	N/R	—	—
Sulfuric Acid; Ferrous Sulfate	10:Sat'd	180	Hast. B	Viton
Sulfuric Acid + Nitric Acid 50:50	30	80	Alloy 20	Viton
Sulfurous Acid	10	120	316 SS	Teflon
Superphosphoric Acid (H_3PO_4)	105	180	316 SS	Viton
Tannic Acid	All	180	316 SS	Viton
Tartaric Acid	All	180	316 SS	Viton
Tetrachloroethylene	100	100	316 SS	Viton
Tetrachloropyridine		100	316 SS	Viton
Textone (50% Aqueous Sodium Chlorite)		100	Hast. C	Viton
Thionyl Chloride		N/R	—	—
Tobias Acid (2-Napthylamine-1-Sulfonic)	All	180	316 SS	Viton
Tolvene	100	120	316 SS	Viton
Transformer Oils		200	316 SS	Viton
Tributyl Phosphate		100	316 SS	Teflon
Trichloroacetic Acid	50	150	Hast. B	Viton
Trichloroethane		100	316 SS	Viton

Continued on next page . . .

Dom. & Exp. on 9D. Dist. on 10C.

GRP CORROSIVE RESISTANCE

Chemical Environment	% Concentration	Max. Temp-°F	Materials: Shaft/ Sleeve	Materials: O-Ring
Trichloroethylene		N/R	—	—
Water, 50 ppm Phenol		100	316 SS	Viton
Water, Deionized	100	180	316 SS	Viton
Water, Demineralized	100	180	316 SS	Viton
Water, Distilled	100	180	316 SS	Viton
Water, Sea, Desalination	2.75 × normal	180	316 SS	Viton
Water, Steam Condensate	100	180	316 SS	Viton
White Liquor (Pulp Mill)		140	316 SS	Viton
Xylene	100	120	316 SS	Viton
Zinc Chloride	70	200	Hast. B	Viton
Zinc Cyanide		150	316 SS	Viton
Zinc Electrolyte		120	Hast. B	Viton
Zinc Sulfate	All	200	316 SS	Viton
PLATING SOLUTIONS				
Brass Plating Sol'n: 3% Copper, 1% Zinc, 5.6% Sodium Cyanide, 3% Sodium Carbonate		150	316 SS	Viton
Cadmium Cyanide Plating Bath: 3% Cadmium Oxide, 10% Sodium Cyanide, 1.2% Sodium Hydroxide		140	316 SS	Viton
Copper Matte Dipping Bath: 30% Ferric Chloride, 19% Hydrochloric		150	Hast. B	Viton
Copper Plating Sol'n: 45% $Cu(BF_4)_2$, 19% Copper Sulfate, 8% Sulfonic		150	Alloy 20	Viton
Gold Plating Sol'n: 23% Potassium Ferrocyanide + Potassium Gold Cyanide, Sodium Cyanide		120	316 SS	Viton
Iron Plating Sol'n: 45% $FeCl_2$, 15% $CaCl_2$, 20% $FeSO_4$, 11% $(NH_4) \cdot 2SO_4$		180	Hast. B	Viton
Nickel Plating Sol'n #1: 11% Nickel Sulfate, 2% Nickel Chloride, 1% Boric Acid		180	Alloy 20	Viton
Nickel Plating Sol'n #2: 44% Nickel Sulfate, 4% Ammonium Chloride, 4% Boric Acid		180	Alloy 20	Viton
Platinum Plating Sol'n		150	Alloy 20	Viton
Silver Plating Sol'n: 4% Silver, 7% Potassium and 5% Sodium Cyanides, 2% Potassium Carbonate		140	316 SS	Viton
Tin Fluorobate Plating Bath: 18% Stannous Fluoborate, 7% Tin, 9% Fluoboric Acid, 2% Boric Acid		180	Alloy 20	Viton

RATINGS, MATERIALS and STD. CONST.

(over)

GRP STANDARD MATERIALS

	COL. VE
Casing	836
Casing O-Ring	Viton A
Casing Studs/Bolts	669
Casing Nuts	669
Pipe Plug (Drain)	Teflon
Impeller	836
"O" Rings (Shaft Sleeve & Impeller Nut)	Viton A
Stuffing Box Cover	836
Gland (Mech. Seal)	836
Gland (Packed Box)	383
Gland Studs & Nuts	669
Shaft (With Sleeve)	348
Sleeve (With Mech. Seals)	838
Shaft Key	348
Seal Cage	Teflon
Stuffing Box Packing	Asbestos
Flinger	Glass filled Nylon
*Support Head	816
Bearing Housing	816
Bearing End Cover	816
*Bearing Housing foot	543F

*Does not apply to Group I pumps.

I-R Spec.	Description[1]
348	Wrought Stainless—ASTM A582 Type 303
383	Cast Stainless—ASTM A296 Gr. CF8M
669	Wrought Stainless—ASTM 276 Type 303
543F	Cast Ductile Iron—ASTM A395
816	Cast Iron—ASTM A48 Cl. 30
836	Glass-Reinforced Vinyl Ester
838	Glass-Reinforced Polymer

1. Material furnished is commercial in quality. Reference to ASTM or other commercial specifications applies to chemical and mechanical properties only.

Continued on next page . . .

STANDARD CONSTRUCTION TABLE

ITEM	Construction Details	STD	OPT
Rotation	CW Hydraulic Institute—(Facing Coupling)	X	
Casing	Pull from rear; center line discharge; confined gasket; foot mounted	X	
Flanges	150 lb. ANSI std. flat face dimensions	X	
Impeller	Open, "O" rings to protect shaft from liquid, externally adjustable, statically balanced. Back ribs not available on following sizes: 1½x1x6; 3x2x6.	X	
Stuffing Box Cover	Rabbet fit to casing and cradle	X	
	In and out connections to stuffing box		X
Stuffing Box	5 rings of packing w/seal cage (Metal shaft sleeve required)		X
	Mechanical seals, various types and manufacturers (Refer to price pages for stock seals)	X	
Shaft	.002 deflection at stuffing box. Machined for hooked sleeve.	X	
Sleeve	Replaceable hook type, sealed to prevent leakage to shaft	X	
Mechanical Seal	Single, double, unbalanced; outside (Refer to price pages for standard stock seals)	X	
	Internal flush (Plan 11A)		X
	Special piping arrangements		X
Glands	Packed box: one piece two bolt style		X
	Packed box: two piece smothering two bolt style		X
	Mechanical seal: 4 bolt plain style (Flush tap standard with outside seals)	X	
	Mechanical seal: 4 bolt flush		X
Coupling	TB Woods spacer coupling	X	
	Falk spacer coupling (and others)		X
Coupling Guard	OSHA type	X	
Bearings/ Lubrication	Oil lubricated, min. B 10 life of 3 yrs., with Trico oilers included. Coupling end bearings are double row to carry axial thrust loads	X	
	Grease lubricated		X
	Brg. housing with drilling for customer oil mist connections		X
Cradle	Cast iron, back pullout, rabbet fit to stuffing box cover to assure alignment	X	
Auxiliary Connections	Casing drain, discharge gauge connection		X
	Drain hole in cradle for stuffing box leakage (not tapped)	X	
Gaskets & "O"-Rings (wet-end)	Viton A	X	
	Teflon		X
Driver	Standard horizontal foot mounted motors in NEMA frames	X	
	Turbine drive		X
Flinger	Flinger mounted on shaft to protect bearings	X	
Tests	Hydrotest (non witness)	X	
	Performance, NPSH, witness tests		X
Bedplates	Steel	X	
	Drip Rim		X
	Stilted		X

RATINGS, MATERIALS and STD. CONST.

(over)

Dom. & Exp. on 9D. Dist. on 10C.

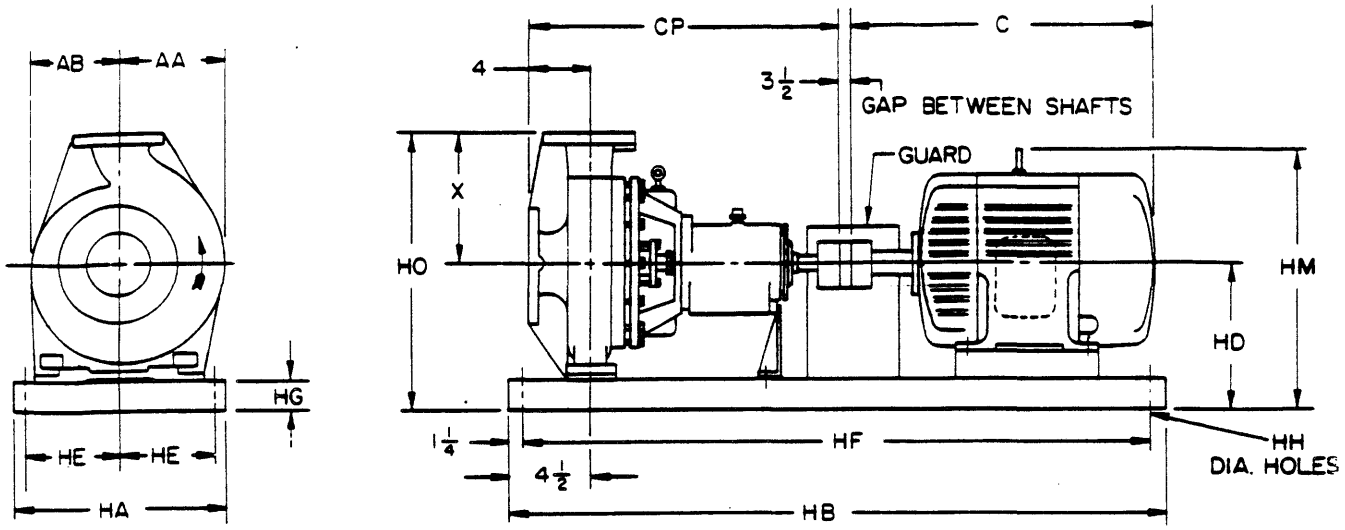

PUMP INFO								
ANSI Desig.	Pump Size	Suction	Discharge	Pump Weight	AA	AB	X	CP
AA	1½x1x6	1½	1	60	5⅜	5⅜	6½	17½
	3x2x6	3	2	65	5⅜	5⅜	6½	17½
A50	3x1½x8	3	1½	175	8 1/16	8⅛	8½	23½
A70	4x3x8	4	3	180	9⅜	9⅜	11	23½
A50	3x1½x10	3	1½	180	8	8	8½	23½
A70	4x3x10	4	3	185	9 1/16	8⅜	11	23½
A75	6x4x10	6	4	195	10⅝	8⅞	13½	23½

BEDPLATE AND MOTOR INFO								
Motor Frames	143/145T	182T	184T	213/215T	254/256T	284/286T	324/326T	364/365T
C	13 1/16	14¾	15¾	19⅜	23 9/16	26 1/16	28 11/16	34 1/16
Motor Wt.	35	58	69	169	302	410	620	900
Bed No.	1T	1T	2T	2T	2T	—	—	—
Bed No.	1T	1T	2T	2T	2T	—	—	—
Bed No.	1	1	1	1	2	2	3	3
Bed No.	1	1	1	1	2	2	3	[illegible]
Bed No.	1	1	1	1	2	2	3	[illegible]
Bed No.	1	1	1	1	2	2	3	3
Bed No.	1	1	1	1	2	2	3	3

PUMP AND MOTOR OVERALL HEIGHT INFO																								
Motor Frames	143/145T			182T			184T			213/215T			254/256T			284/286T			324/326T			364/365T		
Pump	HD	HM	HO	HD	HM	HO	HD	HM	HO	HD	HM	HO	HD	HM	HO	HD	HM	HO	HD	HM	HO	HD	HM	HO
1½x1x6	7⅞	11½	14⅜	7⅞	14⅜	14⅜	8¼	14¾	14¾	8¼	16	14¾	—	—	—	—	—	—	—	—	—	—	—	—
3x2x6	7⅞	11½	14⅜	7⅞	14⅜	14⅜	8¼	14¾	14¾	8¼	16	14¾	8⅝	18⅛	15⅛	—	—	—	—	—	—	—	—	—
3x1½x8	11¼	14⅞	19¾	11¼	17¾	19¾	11¼	17¾	19¾	11¼	19⅛	19¾	11⅝	21⅛	20⅛	11⅝	21¾	20⅛	—	—	—	—	—	—
4x3x8	11¼	14⅞	22¼	11¼	17¾	22¼	11¼	17¾	22¼	11¼	19⅛	22¼	11⅝	21⅛	22⅝	11⅝	21¾	22⅝	12¼	23 7/16	23¼	14	26¾	27½
3x1½x10	—	—	—	—	—	—	—	—	—	11¼	19⅛	19¾	—	—	—	—	—	—	—	—	—	—	—	—
4x3x10	—	—	—	—	—	—	—	—	—	11¼	19⅛	22¼	11⅝	21⅛	22⅝	—	—	—	—	—	—	—	—	—
6x4x10	—	—	—	—	—	—	—	—	—	—	—	—	13⅜	22⅞	26⅞	13⅜	23½	26⅞	14	25 9/16	27½	—	—	—

NOTES:
1 — For information only - Do not use for construction.
2 — All dimensions given in inches, and weights in pounds.
3 — All flanges are ANSI 150 lb. flat-face dimensions.
4 — 3x1½x10, 4x3x10 and 6x4x10 have studded suction.

BEDPLATE INFO							
Bed No.	Weight	HA	HB	HE	HF	HG	HH
1T	45	10	35	4	32½	2⅝	¾
2T	68	12	39	4½	36½	3	¾
1	80	12	45	4½	42½	3	¾
2	147	15	52	6	49½	3⅜	¾
3	205	18	58	7½	55½	4	1

Continued on next page . . .

STILTED BEDPLATE

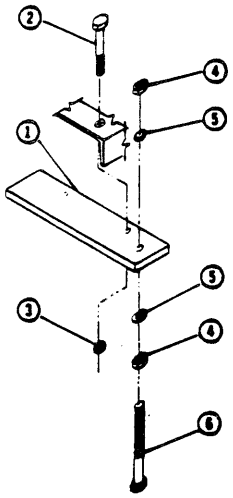

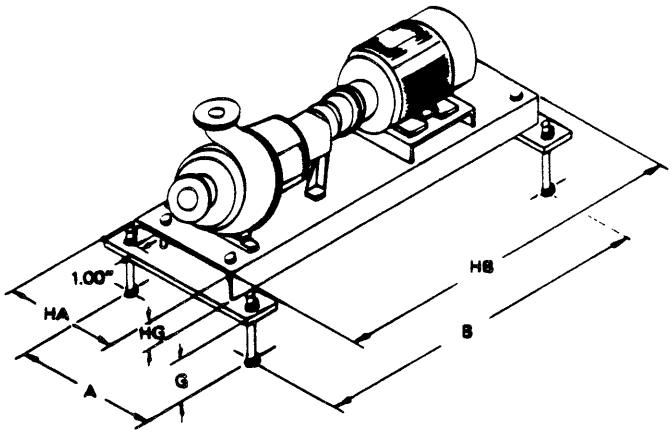

ITEM	QTY	DESCRIPTION	MAT'L
1	2	BRACKET	I-R 241
2	4	HEX HD. CAP SCREW	I-R 175
3	4	HEX NUT	I-R 175
4	8	HEX NUT	AISI 300 SERIES
5	8	LOCK WASHER	AISI 304
6	4	HEX BOLT - LONG TH'D	AISI 304

BEDPLATE				BRACKET MOUNTING			
No	HA	HB	HG	No	A	B	G
1T	10.00	35.00	2.62	1	12.00	34.00	4.50
2T	12.00	39.00	3.00	2	14.00	38.00	4.50
1	12.00	45.00	3.00	2	14.00	44.00	4.50
2	15.00	52.00	3.38	3	17.00	51.00	4.50
3	18.00	58.00	4.00	4	20.00	57.00	4.50

(over)

FOUNDATION

The foundation should be sufficiently rigid and substantial enough to absorb any pump vibration, and to permanently support the bedplate at all points. It should be strong enough to support 1-1/2 times the weight of the unit (including driver). The most satisfactory foundations are made of reinforced concrete.

The foundation bolts should be anchored in the concrete at locations given on the certified general arrangement drawing. A large washer, with lugs, should be welded to the bottom of the bolt, and to the pipe sleeve, to prevent turning. Make the top surface of the foundation 3/4 to 1-1/2 inches below the level of the bedplate to allow for grouting. A rough surface on the top of the concrete will afford the best bond for grout.

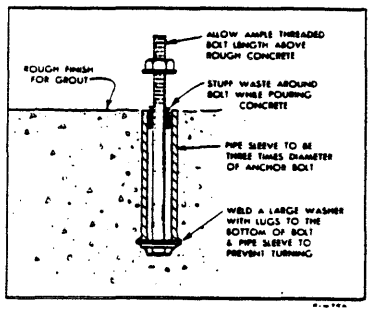

LEVELING THE BASEPLATE

Place the unit on the foundation, and level the baseplate by driving wedges, or shimming, under the bedplate. Use a machinist's level to determine levelness.

Pull the foundation bolts down so they are snug, and re-check bedplate with level. Adjust if necessary.

On stilt-mounted units, the bedplate is leveled by adjusting the nuts on the legs. The floor must be strong enough to support the unit, and reasonably level.

GROUTING

Note: Do not grout until the unit has been leveled.

Build a dam around the foundation, and pour grouting thru holes provided in the bedplate. If a channel steel bedplate was furnished, grouting should be poured through one end.

It is essential that the bedplate be completely grouted, with no voids or air pockets under the bedplate.

After the grout has hardened (48 to 72 hours), remove the dam, and also the wedges, if desired. The holes left by the wedges may be filled with grout.

ALIGNMENT

Correct alignment of the pump and driver is of the utmost importance. Pump-driver combinations are aligned at the factory, but bedplates may be distorted in shipment, and misalignment may occur due to unequal tightening of the foundation bolts or pipe strain. It is therefore essential that alignment is checked before the pump is put into service, and re-aligned if necessary.

Make certain that the pump casing and bearing housing feet are securely fastened. With the standard type of flexible, spacer-type couplings furnished (T.B. Wood's Type SC or Falk Type T), it is more convenient to check alignment with the spacer installed. Driver rotation should be checked before this procedure, or coupling halves must be disconnected when driver rotation is checked.

Check angular alignment by using an inside micrometer or feeler gage, and measure coupling separation at 90° intervals.

Check offset alignment by laying a straight edge across the coupling halves at 90° intervals and measure misalignment (offset) with a feeler gage.

Angular misalignment and offset alignment must be within .005 inches when unit is up to operating temperatures. With motor-driven units, cold offset alignment (vertical difference between coupling halves) should be set per instructions below, then alignment re-checked when unit is up to operating temperatures.

Do not use the bearing housing foot bolts to align the unit. Bring unit into alignment by adjusting the driver (adding or removing shims under the driver feet).

COLD ALIGNMENT SETTINGS (Pump and Driver both cold)

For pumping temperatures up to 120°F, set driver-half coupling .003" below pump half coupling.

For pumping temperatures over 120°F to 200°F maximum, set driver-half coupling .003" above pump half coupling.

MOUNTING DRIVER IN THE FIELD

Important: Check driver shaft run-out.

During the assembly of the pump at the factory, the run-out of the rotating parts is checked.

Before the pump and driver are aligned as a unit, the driver coupling run-out must be checked. Broken shafts sometimes result because of the failure in the field to check the driver shaft run-out.

Continued on next page . . .

BEARINGS

When oil lubricated bearings are furnished, the pumps are shipped with the bearing housings empty of oil. A good quality, neutral mineral oil, which is not highly detergent, and of a grade equal to SAE 30 should be used to fill the bearing housings.

The pump is fitted with a constant-level oiler so that the oil will be maintained at the proper level. For the correct oil level to be maintained, the oiler must be locked at the elevation corresponding to the oil level mark on the bearing housing. A vent is furnished for venting the housing. The oil capacity of the bearing housing needed to give the correct oil elevation is also given below.

Remove the transparent oil reservoir from the oiler. Remove the vent cap, and fill the bearing housing through the vent connection until the oil level in the oiler cup reaches the middle of the oil level bar on the bearing housing. Fill the transparent oil reservoir and install. Slowly raise the reservoir, locking it in place when the first air bubble enters.

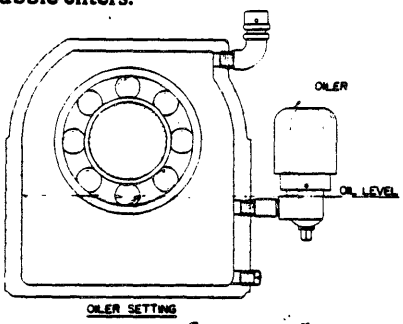

OILER SETTING

APPROXIMATE OIL CAPACITIES

Group 1 Pump Sizes ½ Pint	Group 2 Pump Sizes 3 Pints		Group 3 Pump Sizes 4½ Pints
1½x1x6 3x2x6	3x1½x8 4x3x8 3x1½x10	4x3x10 6x4x10	8x6x13

GREASE LUBRICATED BEARINGS

When grease lubricated bearings are furnished, the radial bearing (Part 27A19) is a double-shielded, factory-packed grease bearing, and needs no attention for the life of the bearing. The thrust bearing (Part 25A19) is of re-greasable design. The bearing is greased at the factory, but it is suggested to re-grease the bearing before starting the unit so as to insure proper lubrication. Refer to grease lubrication instructions on page 19.

A moisture-resistant, lithium-base grease of number 2 consistency should be used. Typical good greases include: Texaco Premium RB, Chevron SRI #2, and Esso Ronex MP.

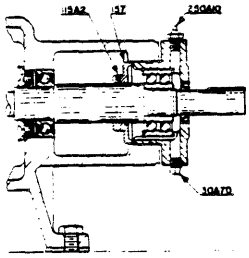

GROUP 1—GREASE LUBE CRADLE

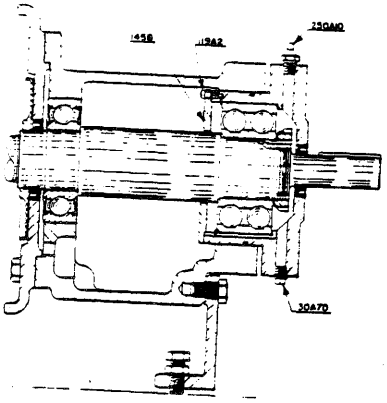

GROUP 2—GREASE LUBE CRADLE

OIL MIST LUBRICATION

When oil-mist lubrication is desired, the pump comes equipped with appropriate connections for the installation of the oil-mist system by the customer. There are two methods of oil-mist lubrication:

One method is called "Purge Mist". In this method, the bearing housing is filled with oil as in normal oil-lubricated construction described above (complete with constant-level oiler). Oil mist is introduced into the bearing housing thru the vent connection and allowed to pass thru the bearings and out the oil mist vents provided on the outboard side of each bearing. A ⅛" diameter "overflow" hole must be drilled in the constant-level oiler just above the normal oil level.

The other method is a "Pure Mist" system. In this case the bearing housing is empty of oil. The oil mist is introduced thru the vent connection or thru the tap normally used for the constant-level oiler and allowed to pass thru the bearings and out the oil mist vents on the outboard side of each bearing. Provision must be made (using the normal oil-drain connection) to remove the oil which accumulates in the bearing housing from the oil mist.

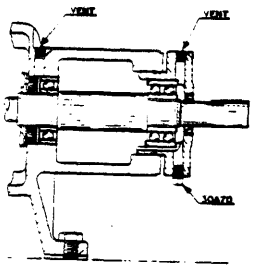

GROUP 1—OIL-MIST CRADLE

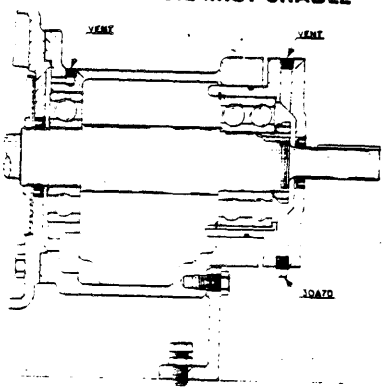

GROUP 2—OIL-MIST CRADLE

(over)

GROUP I—1½x1x6 —3x2x6

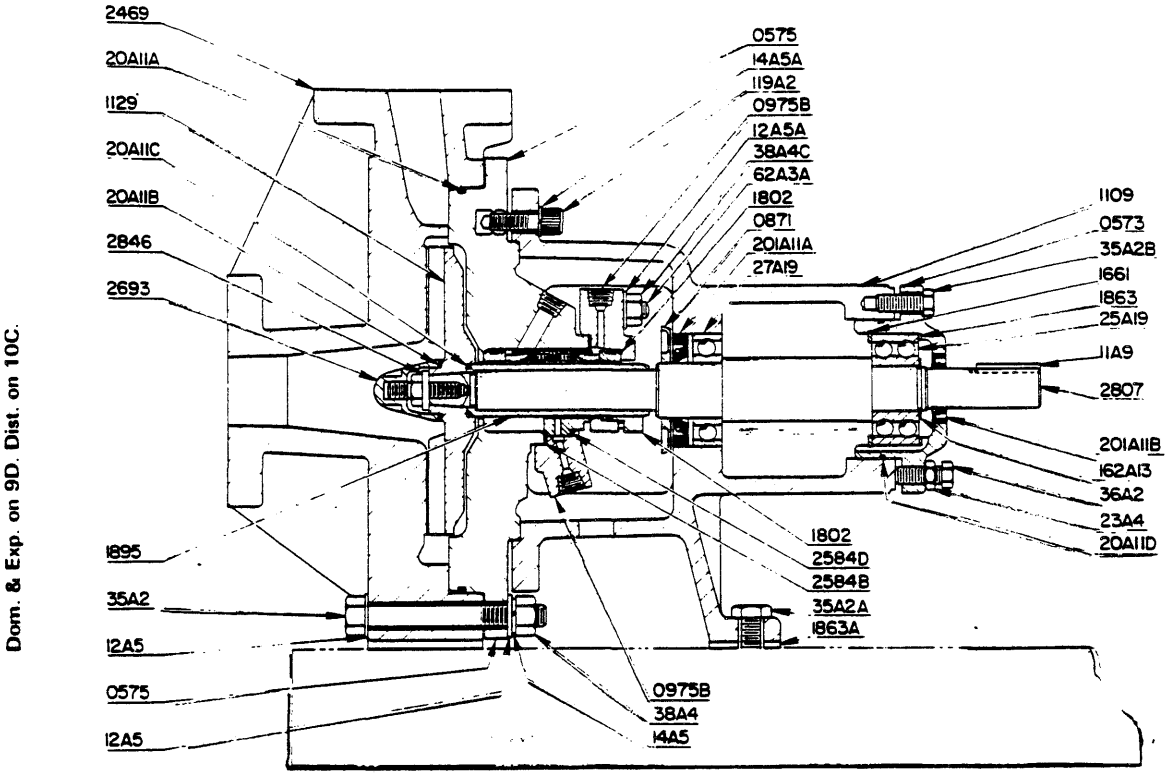

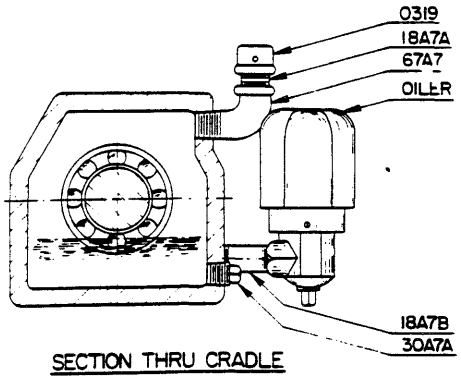

SECTION THRU CRADLE

PART NO.	NAME OF PART
0573	BEARING END COVER
0575	STUFFING BOX COVER
0871	FLINGER
0975B	GLAND
1109	BEARING HOUSING
1129	IMPELLER
1895	SLEEVE
1802	MECHANICAL SEAL
2469	CASING
20A11A	GASKET (CASING)
201A11A	OIL SEAL
201A11B	OIL SEAL
2807	SHAFT
11A9	KEY
1863	SHIMS
18A7A	PIPE NIPPLE
18A7B	PIPE NIPPLE
20A11B	"O" RING
20A11C	"O" RING
23A4	JAM NUT

PART NO.	NAME OF PART
25A19	BEARING (DOUBLE ROW)
27A19	BEARING
30A7A	PIPE PLUG
35A2	CAPSCREW
35A2A	CAPSCREW
35A2B	CAPSCREW
36A2	CAPSCREW
38A4	NUT
38A4C	NUT
62A3A	STUD
67A7	STREET ELBOW
0319	PIPE CAP
161A13	SNAP RING
162A13	SNAP RING
1863A	SHIMS
20A11D	"O" RING
2846	IMPELLER STUD
2693	IMPELLER NUT
119A2	SOC. HD. CAP SCREW

CROSS SECTIONS, PARTS LISTS

Continued on next page . . .

GROUP II—3x1½x8
4x3x8

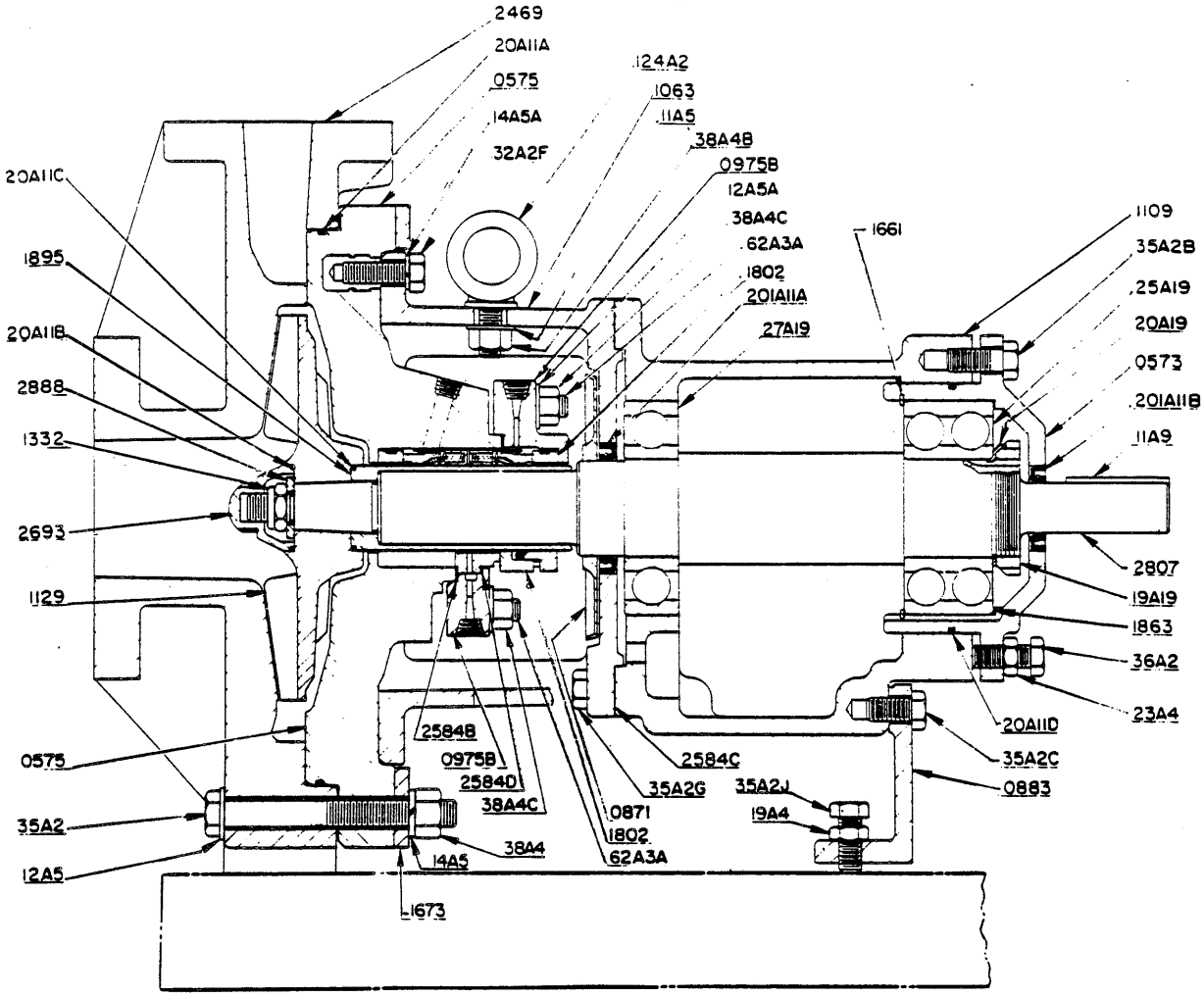

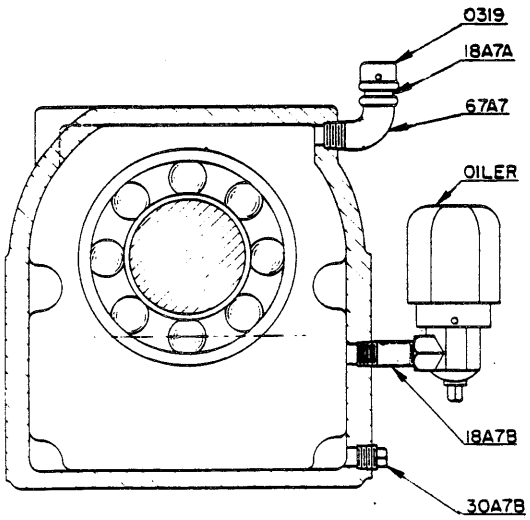

SECTION THRU CRADLE

PART NO.	NAME OF PART
0573	BEARING END COVER
0575	STUFFING BOX COVER
0871	FLINGER
0883	BEARING HOUSING FOOT
0975B	GLAND
1063	SUPPORT HEAD
1109	BEARING HOUSING
1129	IMPELLER
124A2	EYEBOLT
1673	SUPPORT RING
1895	SLEEVE
1802	MECHANICAL SEAL
2469	CASING
20A11A	GASKET (CASING)
2584C	GASKET (BEARING HOUSING)
201A11A	OIL SEAL
201A11B	OIL SEAL
2807	SHAFT
11A5	WASHER
11A9	KEY
1863	SHIMS
18A7A	PIPE NIPPLE
18A7B	PIPE NIPPLE
19A19	BEARING LOCK NUT
19A4	JAM NUT

PART NO.	NAME OF PART
20A11B	"O" RING
20A11C	"O" RING
20A19	BEARING LOCK WASHER
23A4	JAM NUT
25A19	BEARING (DOUBLE ROW)
27A19	BEARING
30A7B	PIPE PLUG
35A2	CAPSCREW
35A2B	CAPSCREW
35A2C	CAPSCREW
35A2F	CAPSCREW
35A2G	CAPSCREW
35A2J	CAPSCREW
36A2	CAPSCREW
38A4	NUT
38A4B	NUT
38A4C	NUT
62A3A	STUD
67A7	STREET ELBOW
0319	PIPE CAP
161A13	SNAP RING
20A11D	"O" RING
2888	IMPELLER WASHER
1332	IMPELLER LOCK-NUT
2693	IMPELLER NUT

(over)

Dcm. & Exp. on 9D. Dist. on 10C.

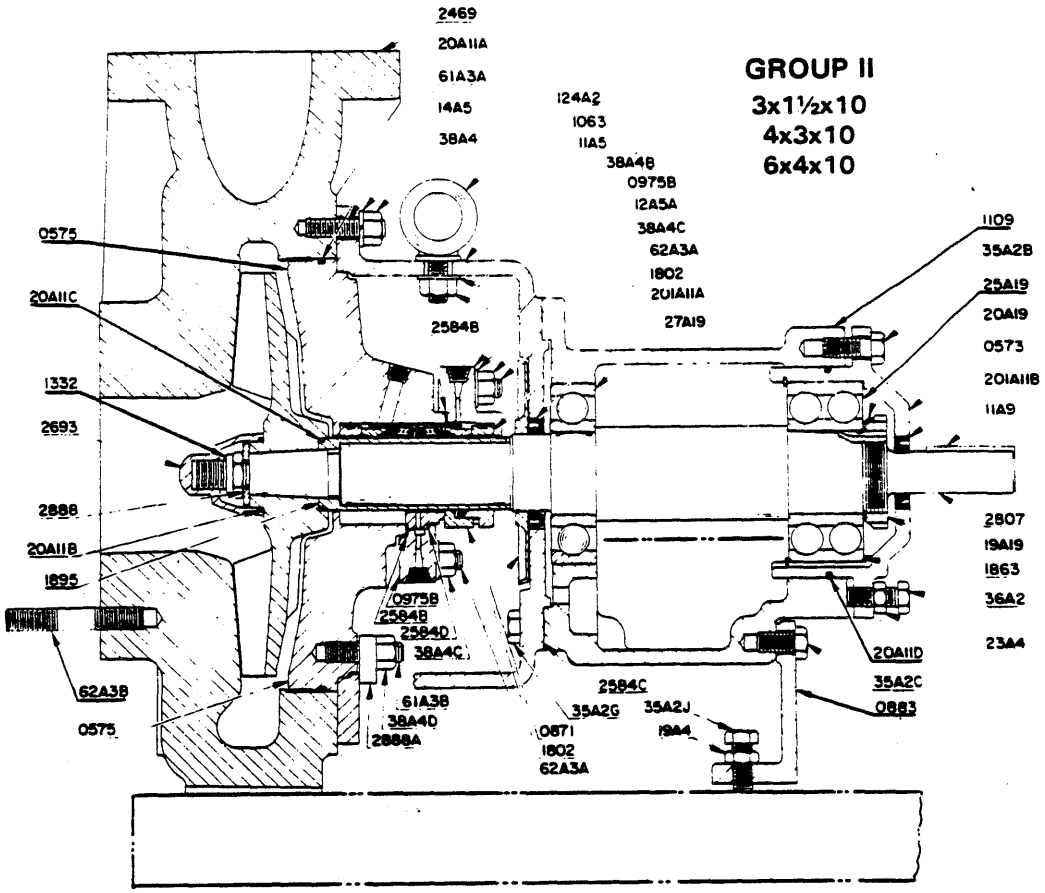

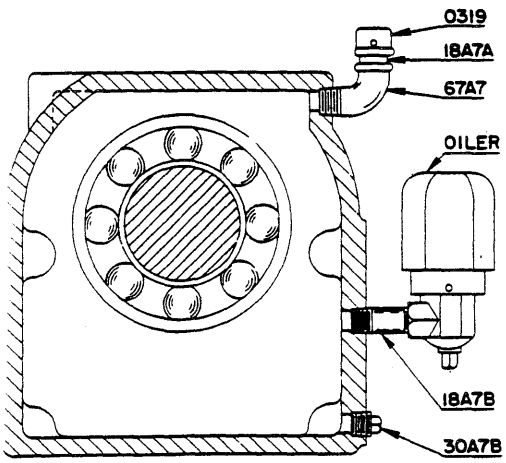

SECTION THRU CRADLE

PART NO.	NAME OF PART
0573	BEARING END COVER
0575	STUFFING BOX COVER
0871	FLINGER
0883	BEARING HOUSING FOOT
0975B	GLAND
1063	SUPPORT HEAD
1109	BEARING HOUSING
1129	IMPELLER
124A2	EYEBOLT
1673	SUPPORT RING
1895	SLEEVE
1802	MECHANICAL SEAL
2469	CASING
20A11A	GASKET (CASING)
2584C	GASKET (BEARING HOUSING)
201A11A	OIL SEAL
201A11B	OIL SEAL
2807	SHAFT
11A5	WASHER
11A9	KEY
1863	SHIMS
18A7A	PIPE NIPPLE
18A7B	PIPE NIPPLE
19A19	BEARING LOCK NUT
19A4	JAM NUT
20A11B	"O" RING

PART NO.	NAME OF PART
20A11C	"O" RING
20A19	BEARING LOCK WASHER
23A4	JAM NUT
25A19	BEARING (DOUBLE ROW)
27A19	BEARING
30A7B	PIPE PLUG
61A3A	CASING STUD
35A2B	CAPSCREW
35A2C	CAPSCREW
35A2F	CAPSCREW
35A2G	CAPSCREW
35A2J	CAPSCREW
36A2	CAPSCREW
38A4	NUT
38A4B	NUT
38A4C	NUT
62A3A	STUD
62A3B	SUCTION STUD
67A7	STREET ELBOW
0319	PIPE CAP
161A13	SNAP RING
20A11D	"O" RING
2888	IMPELLER WASHER
1332	IMPELLER LOCK-NUT
2693	IMPELLER NUT

**CROSS SECTIONS,
PARTS LISTS**